BRAKES, REAR CALIPER - Z26NEY99A4/B4/A6/B6 (C750946)

2026 RZR - RZR XP S 1000 ULTIMATE (R01) - Z26NEY99A4/B4/A6/B6

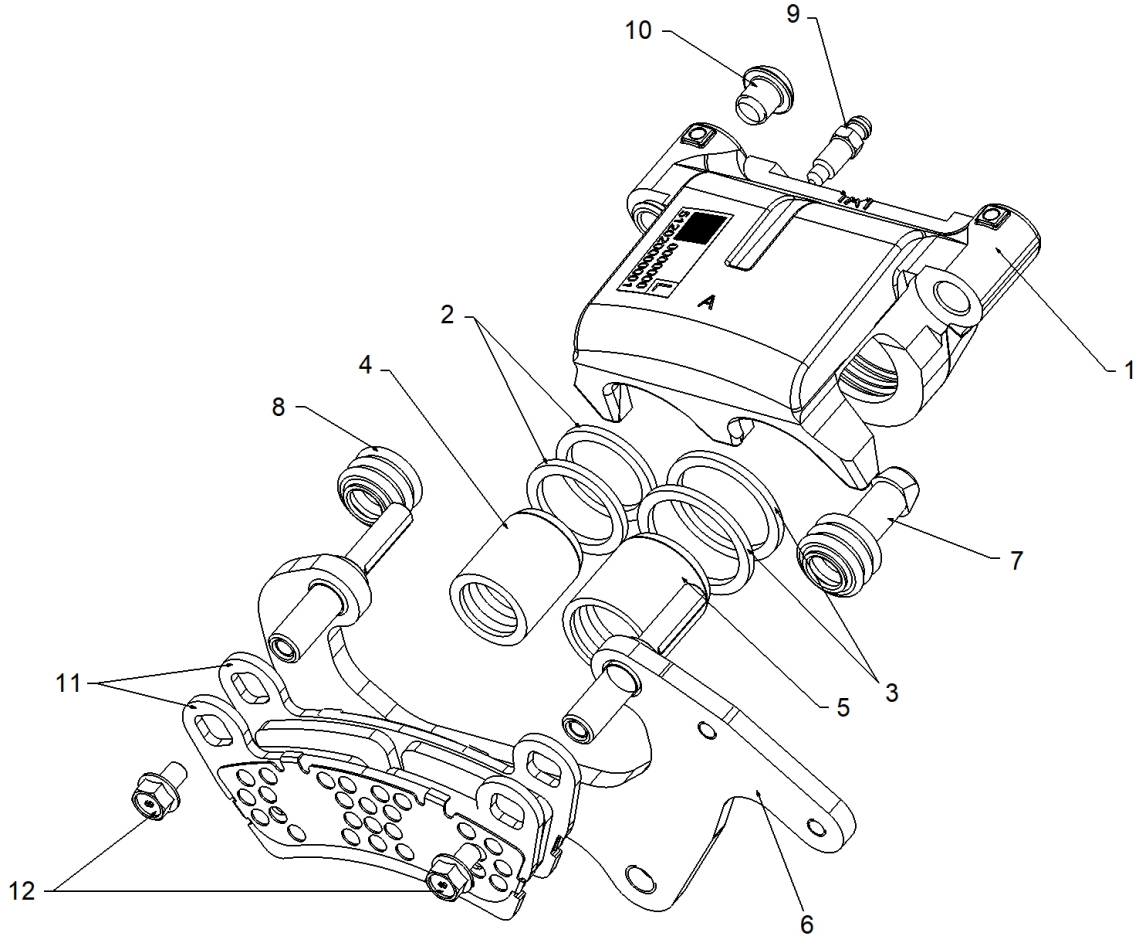

©2025 Polaris Industries

C750946

Reference #	Part#	Description	Quantity
	1914789	ASM-BRK-CAL-RL-25X30,ALG [INCLUDES ALL]	1
	1914790	ASM-BRK-CAL-RR-25X30,ALG [INCLUDES ALL]	1
	2212815	K-CALIPER BODY,R LH [INCLUDES 1-5, 9 & 10]	
	2212816	K-CALIPER BODY,R RH [INCLUDES 1-5, 9 & 10]	
	2212817	K-PAD,BRAKE [INCLUDES 11 & 12]	
	2212819	K-BRKT,CALIPER,BRAKE [INCLUDES 6-8]	
1	-------	HOUSING MACHINING 25X30, LH	1
2	5418221-25	SEAL,CALIPER,1.00	2
3	5418221-30	SEAL,CALIPER,1.188"	2
4	5144770	PISTON-BRAKE,25MM,AL,GROOVED	1
5	5144771	PISTON-BRAKE,30MM,AL,GROOVED	1
6	-------	ASM-CALIPER MOUNT, LH	1
7	5412505	BOOT-PIN BUSHING	1

8	5412506	BOOT-PIN SEAL	1
9	-------	SCREW-BLEEDER, M7	1
10	-------	FLANGE BOLT M10X10	1
11	1914326	ASM-BRAKE-PAD,99.82,SS	2
12	7528157	SCR-HXFL-M6X1.0X10 8.8 ZF	2

Copyright 1996-2026 Polaris Industries U.S.A All rights reserved.